Towards Reasoning-Aware Explainable VQA

Rakesh Vaideeswaran[1] Feng Gao[2] Abhinav Mathur[2] Govind Thattai[2]
[1]University of Illinois Urbana-Champaign [2]Amazon Alexa AI
rmahesh3@illinois.edu, {fenggo, mathuabh, thattg}@amazon.com

MOTIVATION

- Most VQA systems focus only on improving VQA performance.
- Models that provide a caption which summarizes the image do not unveil the reasoning chain behind predicting a particular answer.
- Explainable VQA models generate an explanation for the predicted answer.
- We present easy-to-implement methods on top of a SOTA VQA framework which maintains VQA accuracy while generating human-readable textual explanations.

Q: Is the stovelight on? **GT Ans:** Yes
M1, M2, M3: Yes
C: There is a stove and a bunch of knives
E: The space under the hood is brighter than the surrounding area.

MODEL ARCHITECTURE

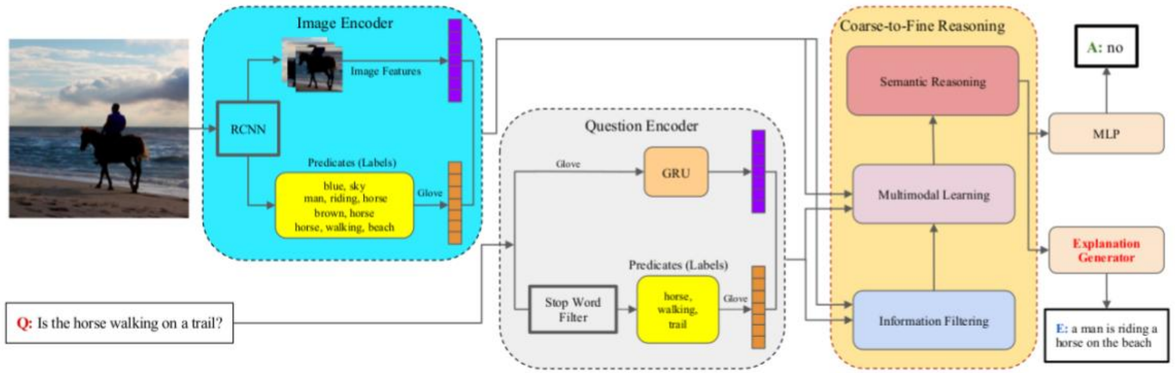

EXAMPLE RESULTS

INCORRECT SAMPLES - At least one of Answer/Explanation is Incorrect

Q:Are these bananas ripe?
GT Ans: no
GT Expl: a pile of bananas that are piled up on the table.
Pred Ans: yes
Pred Expl: a bunch of bananas that are sitting on a table

Q: How many chairs are in the stack?
GT Ans: 3
GT Expl: a dog is laying in three chairs stacked together.
Pred Ans: 2
Pred Expl: a dog is sitting on a couch in front of a laptop

Q: Which room is this?
GT Ans: bathroom
GT Expl: a bathroom which has a telephone, sink and mirror.
Pred Ans: bathroom
Pred Expl: a cat is sitting in a bathroom sink and is looking out into the distance

CORRECT SAMPLES - Answer and Explanation are Correct

Q: What game is he playing?
GT Ans: baseball
GT Expl: a baseball player is swinging a bat and some grass
Pred Ans: baseball
Pred Expl: a baseball player is swinging his bat

Q: How many sinks are there?
GT Ans: 2
GT Expl: modern bathroom with two sinks a toilet and a shower.
Pred Ans: 2
Pred Expl: a bathroom with two sinks and a mirror above it

Q: How many trains are there?
GT Ans: 2
GT Expl: two trains are on tracks in a commuter strain station with people standing on the platform between them.
Pred Ans: 2
Pred Expl: two trains are parked on the tracks at a station

Q:What color is the animal?
GT Ans: black
GT Expl: a black bear is standing outdoors in the wild.
Pred Ans: black
Pred Expl: a black bear is walking around in the woods

Q: Where is the kite?
GT Ans: sky
GT Expl: a man sitting in a field flying a kite in the blue sky.
Pred Ans: sky
Pred Expl: a man is flying a kite in the sky high

Q: Is the bird sitting?
GT Ans: yes
GT Expl: a blue bird is sitting on a tree branch
Pred Ans: yes
Pred Expl: a bird is sitting on the branch of a tree

EXPERIMENTAL RESULTS

Dataset	Expl. Model	α	VQA score
VQA-E[16]	N/A	N/A	71.48
	LSTM	0.25	71.36
	LSTM	0.50	**71.55**
	LSTM	0.75	71.53
	LSTM	1.0	71.32
	Transformer	0.50	71.46
GQA-REX[21]	N/A	N/A	77.49
	LSTM	0.25	75.08
	LSTM	0.50	77.16
	LSTM	1.0	**77.33**
	Transformer	0.50	77.06

Table 1: VQA scores of the predicted answers from our method on VQA-E and GQA-REX validation datasets.

Dataset	Model	BLEU-1	ROUGE-1	ROUGE-2	ROUGE-L
VQA-E val	Baseline[16]	0.268	-	-	0.249
	CFRF+LSTM	0.33	0.364	0.117	0.325

Table 2: Quantitative evaluation of the generated explanations on VQA-E validation set.

DISADVANTAGES OF AUTOMATIC METRICS

Q: Is the lady going for a walk in the rain?
GT Ans.: Yes
GT Expl: A woman holding an umbrella facing a row of shops that are closed for the night.
Predicted Ans.: Yes
Predicted Expl.: a woman is walking in the rain with an umbrella.
BLEU-1: 0.27. Rouge-1-F1: 0.39.

Q: What are all of the people doing?
GT Ans.: flying kites
GT Expl.: A group of people are flying kites in the sky.
Predicted Ans.: flying kites
Predicted Expl.: A group of people flying kites in the sky.
BLEU-1: 0.89. Rouge-1-F1: 0.94.

Q: What color are his shorts?
GT Ans.: black
GT Expl.: A man in red shirt and black shorts playing a game of tennis.
Predicted Ans.: black
Predicted Expl.: A man in blue shirt and white shorts playing a game of tennis
BLEU-1: 0.84. Rouge-1-F1: 0.83.

HUMAN STUDY

Question: **How many chefs are in the picture?**

Is the explanation sufficient to lead the answer to the question?
Explanation: **two people in a kitchen with two ovens**
Answer: **2**
○ Yes ○ No but contains the answer ○ No ○ Not determined

Is the explanation sufficient to lead the answer to the question?
Explanation: **two male chefs cooking in a kitchen while another staff member uses a mobile phone.**
Answer: **3, 2**
○ Yes ○ No but contains the answer ○ No ○ Not determined

Context	Yes	No, but contains the Ans.	No	Not determined
predicted [total]	56.46%	9.02%	34.12%	0.4%
predicted [unique]	65.16 %	2.01%	32.8%	0.03%
ground-truth [total]	83.90%	5.12%	10.98%	0%
ground-truth [unique]	93.12%	0.57%	6.31%	0%

Table 3: Statistics of the raw human annotation data. It contains 4735 unique examples from the VQA-E validation set. Each job is distributed to 3 different annotators to eliminate potential bias.

	Predicted		Ground-truth	
	Valid Expl.	Invalid Expl.	Valid Expl.	Invalid Expl.
Correct Ans.	**56.39%**	23.77%	93.11%	6.88%
Wrong Ans.	8.77%	11.05%	-	-

Table 4: Ratio of valid/invalid explanation based on the correctness of the predicted answer.